KLUDI BALANCE

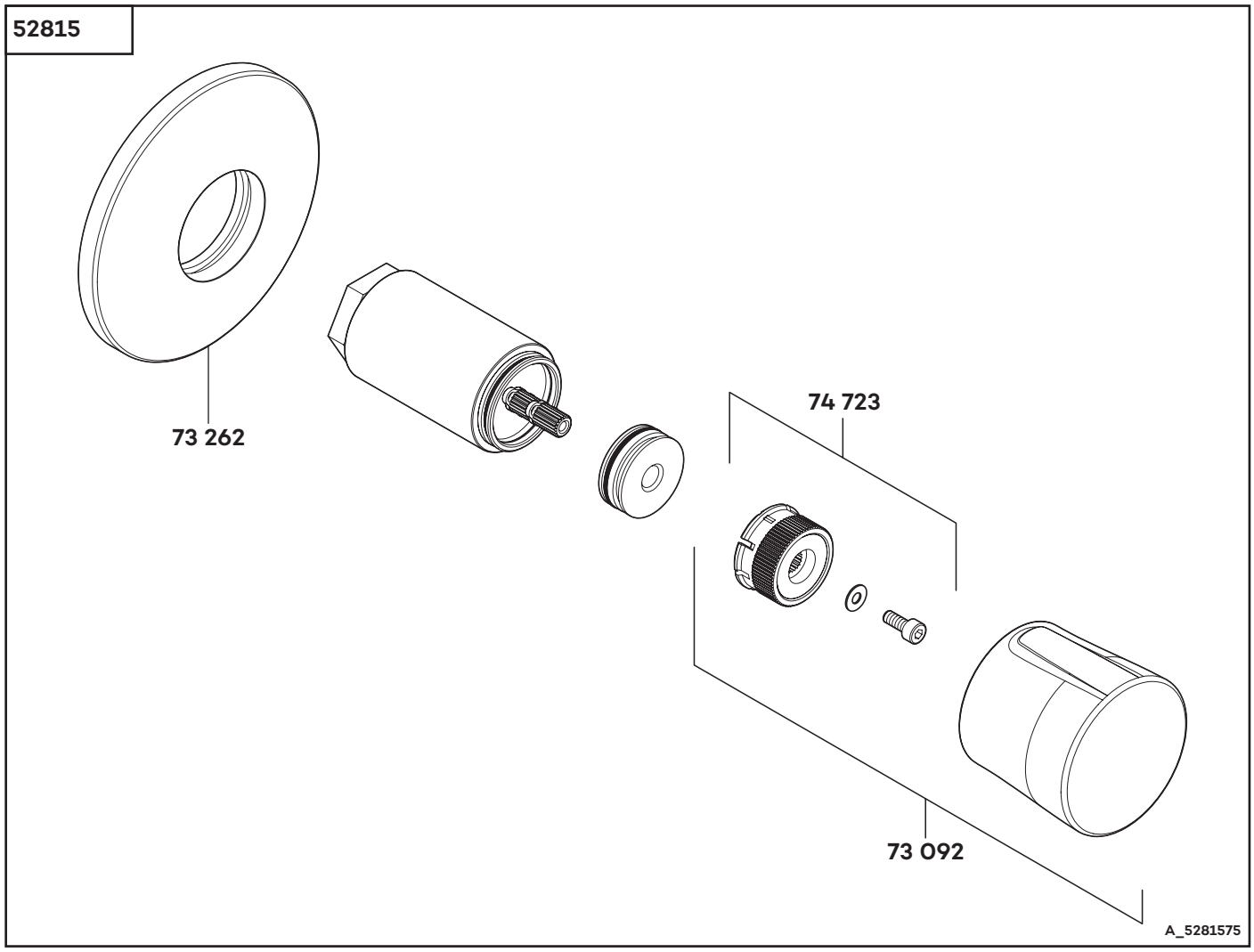

52815	Unterputzventil, Feinbau-Set	concealed valve, trim set	inbouw stopkraan
73 092	Griff	handle	greep
73 262	Rosette, komplett	wall flange	rozet
74 723	Rastbuchse, komplett	insert, complete	klemnok, compleet

KLUDI
WATER IN PERFECTION